Product data sheet
Characteristics

LUCC1XFU
advanced control unit LUCC - class 10 - 0.35...1.4 A - 110...220 V DC/AC

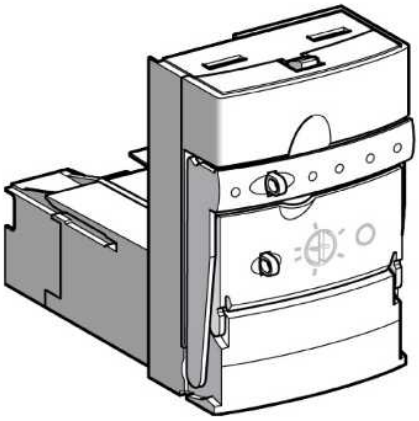

Main

Range of product	TeSys U
Device short name	LUCC
Product or component type	Advanced control unit
Product specific application	Basic protection and advanced functions, communication
Product compatibility	ASILUFC5 ASILUFC51 LUFC00 LUFDA01 LUFDA10 LUFDH11 LUFN.. LUFV2 LUFW10 LULC031 LULC033 LULC07 LULC08 LULC09 LULC15
Utilisation category	AC-41 AC-43 AC-44
Motor power kW	0.09 kW at 400...440 V AC 50/60 Hz
Thermal protection adjustment range	0.35...1.4 A
[Uc] control circuit voltage	110...220 V DC 110...240 V AC
Overload tripping class	Class 10 - frequency limit: 40...60 Hz - temperature compensation: -25...55 °C - conforming to IEC 60947-6-2 Class 10 - frequency limit: 40...60 Hz - temperature compensation: -25...55 °C - conforming to UL 508

Complementary

Main function available	Earth fault protection Manual reset Protection against overload and short-circuit Protection against phase failure and phase imbalance
Mounting mode	Plug-in
Mounting location	Front side
Control circuit voltage limits	88...242 V for DC circuit 110...220 V in operation 88...264 V for AC circuit 110...240 V in operation
Typical current consumption	25 mA at 110...240 V AC I rms sealed with LUB12 25 mA at 110...240 V AC I rms sealed with LUB32 280 mA at 110...220 V DC I maximum while closing with LUB12 280 mA at 110...220 V DC I maximum while closing with LUB32 280 mA at 110...240 V AC I maximum while closing with LUB12 280 mA at 110...240 V AC I maximum while closing with LUB32 35 mA at 110...220 V DC I rms sealed with LUB12 35 mA at 110...220 V DC I rms sealed with LUB32
Operating time	35 ms opening with LUB12 for control circuit 35 ms opening with LUB32 for control circuit 50 ms closing with LUB12 for control circuit 50 ms closing with LUB32 for control circuit
Load type	Single-phase motor
Tripping threshold	14.2 x Ir +/- 20 %

The information provided in this documentation contains general descriptions and/or technical characteristics of the performance of the products contained herein.
This documentation is not intended as a substitute for and is not to be used for determining suitability or reliability of these products for specific user applications.
It is the duty of any such user or integrator to perform the appropriate and complete risk analysis, evaluation and testing of the products with respect to the relevant specific application or use thereof.
Neither Schneider Electric Industries SAS nor any of its affiliates or subsidiaries shall be responsible or liable for misuse of the information contained herein.

[Ui] rated insulation voltage	600 V conforming to CSA 22-2 No 14 600 V conforming to UL 508 690 V conforming to IEC 60947-1
[Uimp] rated impulse withstand voltage	6 kV conforming to IEC 60947-6-2
Safe separation of circuit	400 V SELV between the control and auxiliary circuits conforming to IEC 60947-1 400 V SELV between the control or auxiliary circuit and the main circuit conforming to IEC 60947-1
Product weight	0.140 kg

Environment

Heat dissipation	2 W for control circuit with LUB12 3 W for control circuit with LUB32
Immunity to microbreaks	3 ms
Immunity to voltage dips	70 % 500 ms conforming to IEC 61000-4-11
Standards	CSA C22-2 No 14 type E EN 60947-6-2 IEC 60947-6-2 UL 508 type E with phase barrier
Product certifications	ABS ASEFA ATEX BV CCC CSA DNV (Det Norske Veritas) GL GOST LROS (Lloyds register of shipping) UL
IP degree of protection	IP20 front panel and wired terminals conforming to IEC 60947-1 IP20 other faces conforming to IEC 60947-1 IP40 front panel outside connection zone conforming to IEC 60947-1
Protective treatment	TH conforming to IEC 60068
Ambient air temperature for operation	-25...60 °C with LUCM -25...70 °C with LUCA, LUCB, LUCC, LUCD
Ambient air temperature for storage	-40...85 °C
Operating altitude	2000 m
Fire resistance	650 °C conforming to IEC 60695-2-12 960 °C parts supporting live components conforming to IEC 60695-2-12
Shock resistance	10 gn power poles open conforming to IEC 60068-2-27 15 gn power poles closed conforming to IEC 60068-2-27
Vibration resistance	2 gn 5...300 Hz power poles open conforming to IEC 60068-2-6 4 gn 5...300 Hz power poles closed conforming to IEC 60068-2-6
Resistance to electrostatic discharge	8 kV level 3 in open air conforming to IEC 61000-4-2 8 kV level 4 on contact conforming to IEC 61000-4-2
Non-dissipating shock wave	1 kV serial mode conforming to IEC 60947-6-2 2 kV common mode conforming to IEC 60947-6-2
Resistance to radiated fields	10 V/m 3 conforming to IEC 61000-4-3
Resistance to fast transients	2 kV class 3 serial link conforming to IEC 61000-4-4 4 kV class 4 all circuits except for serial link conforming to IEC 61000-4-4
Immunity to radioelectric fields	10 V conforming to IEC 61000-4-6