Product data sheet
Characteristics

XCNR2918P20
Limit switch, Limit switches XC Standard, XCNR, thermoplastic roller lever, 2NC, snap, M20

Important message: We have updated the process for ordering Telemecanique Sensors products.For more information, please contact your Telemecanique Sensors representative in the UK&I at: UK.salesorders@tesensors.comYou can find all product information on the Telemecanique Sensors website: www.tesensors.com/uk/en
EAN Code: 3389119034432

Main

Range of product	Telemecanique Limit switches XC Standard
Series name	Standard format
Product or component type	Limit switch
Device short name	XCNR
Sensor design	Compact
Reset	With
Body type	Fixed
Head type	Rotary head
Material	Plastic
Body material	Plastic
Head material	Plastic
Fixing mode	By the body
Movement of operating head	Rotary
Type of operator	Spring return roller lever thermoplastic
Type of approach	Lateral approach, 2 directions
Number of poles	2
Contacts type and composition	2 NC
Contact operation	Snap action

Complementary

Switch actuation	By 30° cam
Electrical connection	Screw-clamp terminals, clamping capacity: 1 x 0.34...2 x 1.5 mm²
Cable entry	1 entry tapped for M20 x 1.5 cable gland, cable outer diameter: 7…13 mm
Contacts insulation form	Zb
Positive opening	With
Positive opening minimum torque	0.15 N.m
Minimum torque for tripping	0.1 N.m
Maximum actuation speed	1.5 m/s
Contact code designation	A300, AC-15 (Ue = 240 V), Ie = 3 A, Ithe = 10 A conforming to EN/IEC 60947-5-1 appendix A R300, DC-13 (Ue = 250 V), Ie = 0.1 A conforming to EN/IEC 60947-5-1 appendix A
[Ui] rated insulation voltage	300 V conforming to UL 508 500 V (pollution degree 3) conforming to EN/IEC 60947-1 300 V conforming to CSA C22.2 No 14
[Uimp] rated impulse withstand voltage	6 KV conforming to IEC 60664 6 kV conforming to IEC 60947-1

The information provided in this documentation contains general descriptions and/or technical characteristics of the performance of the products contained herein.
This documentation is not intended as a substitute for and is not to be used for determining suitability or reliability of these products for specific user applications.
It is the duty of any such user or integrator to perform the appropriate and complete risk analysis, evaluation and testing of the products with respect to the relevant specific application or use thereof.
Neither Schneider Electric Industries SAS nor any of its affiliates or subsidiaries shall be responsible or liable for misuse of the information contained herein.

Short-circuit protection	10 A cartridge fuse, type gG
Mechanical durability	100000 cycles

Environment

Shock resistance	50 gn for 11 ms conforming to IEC 60068-2-27
Vibration resistance	25 gn (f= 10…500 Hz) conforming to IEC 60068-2-6
IP degree of protection	IP65 conforming to IEC 60529
IK degree of protection	IK04 conforming to EN 50102
Electrical shock protection class	Class II conforming to IEC 61140 Class II conforming to NF C 20030
Ambient air temperature for operation	-25…70 °C
Ambient air temperature for storage	-40…70 °C
Protective treatment	TC
Product certifications	CCC[RETURN]CSA[RETURN]UL
Standards	EN 60204-1 CSA C22.2 No 14 UL 508 EN 60947-5-1 IEC 60204-1 IEC 60947-5-1

Packing Units

Unit Type of Package 1	PCE
Number of Units in Package 1	1
Package 1 Height	4.45 cm
Package 1 Width	3.0 cm
Package 1 Length	12.36 cm
Package 1 Weight	99.0 g
Unit Type of Package 2	BB1
Number of Units in Package 2	20
Package 2 Height	10.8 cm
Package 2 Width	16.0 cm
Package 2 Length	30.5 cm
Package 2 Weight	2.08 kg
Unit Type of Package 3	S03
Number of Units in Package 3	60
Package 3 Height	30.0 cm
Package 3 Width	30.0 cm
Package 3 Length	40.0 cm
Package 3 Weight	7.0 kg

Offer Sustainability

Sustainable offer status	Green Premium product
REACh Regulation	REACh Declaration
EU RoHS Directive	Pro-active compliance (Product out of EU RoHS legal scope)
Mercury free	Yes
RoHS exemption information	Yes

Contractual warranty

Warranty	18 months

XCNR2918P20

Dimensions

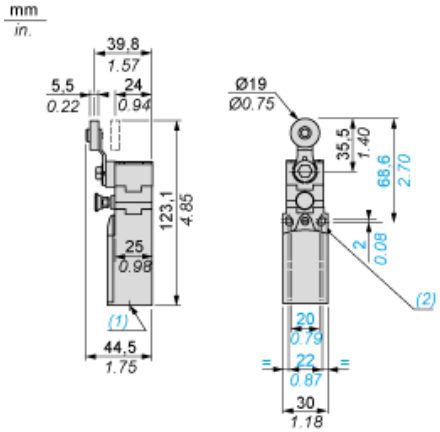

(1) 1 tapped entry for M20 x 1.5
(2) Ø: 2 elongated holes Ø 4.3 x 6.3 on 22 mm centres, 2 holes Ø 4.3 on 20 mm centres.

XCNR2918P20

Mounting with Cable Entry

Position of Cable Gland

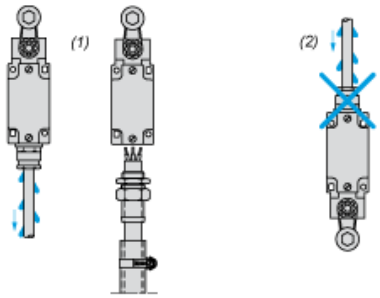

(1) Recommended
(2) To be avoided

Mounting with Rotary Heads and Levers

Type of Cam

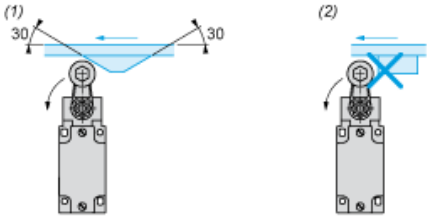

(1) Recommended
(2) To be avoided

Wiring Diagrams

2-pole NC + NC Snap Action

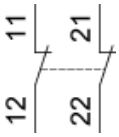

Characteristics of Actuation

Switch Actuation by 30° Cam

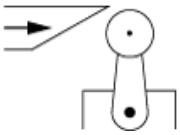

Functionnal Diagram

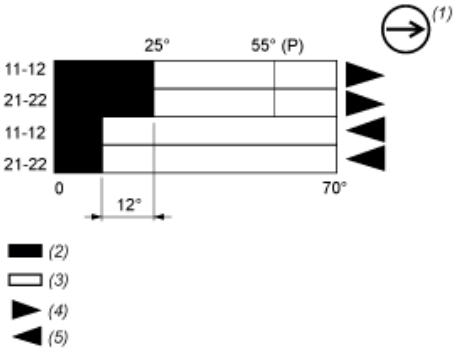

(P) Positive opening point
(1) NC contact with positive opening operation
(2) Closed
(3) Open
(4) Tripping
(5) Resetting