Product data sheet
Characteristics

XS7D1A1NBM12DIN
inductive sensor XS7 80x80x26 - PBT - Sn40mm - 12..24VDC - M12

Important message: We have updated the process for ordering Telemecanique Sensors products.For more information, please contact your Telemecanique Sensors representative in the UK&I at: UK.salesorders@tesensors.comYou can find all product information on the Telemecanique Sensors website: www.tesensors.com/uk/en
EAN Code: 3389110381771

Main

Range of product	Telemecanique Inductive proximity sensors XS
Series name	General purpose
Sensor type	Inductive proximity sensor
Device application	-
Sensor name	XS7
Sensor design	Flat form 80 x 80 x 26
Size	40 mm
Body type	Fixed clippable onto DIN rail
Detector flush mounting acceptance	Flush mountable
Material	Plastic
Enclosure material	PBT
Type of output signal	Discrete
Wiring technique	3-wire
Discrete output function	1 NC
Output circuit type	DC
Discrete output type	NPN
Electrical connection	Male connector M12, 4 pins
[Us] rated supply voltage	12...24 V DC with reverse polarity protection
Switching capacity in mA	<= 100 mA DC with overload and short-circuit protection
IP degree of protection	IP67 double insulation conforming to IEC 60529

Complementary

Detection face	Frontal
Front material	PBT
Operating zone	0…32 mm
Differential travel	1...15% of Sr
Status LED	Output state: 1 LED (yellow)
Supply voltage limits	10…36 V DC
Switching frequency	<= 100 Hz
Maximum voltage drop	<2 V (closed)
Current consumption	<= 10 mA no-load
Maximum delay first up	30 ms
Maximum delay response	5 ms
Maximum delay recovery	35 ms
Marking	CE
Depth	40 mm
Height	80 mm
Width	80 mm

The information provided in this documentation contains general descriptions and/or technical characteristics of the performance of the products contained herein.
This documentation is not intended as a substitute for and is not to be used for determining suitability or reliability of these products for specific user applications.
It is the duty of any such user or integrator to perform the appropriate and complete risk analysis, evaluation and testing of the products with respect to the relevant specific application or use thereof.
Neither Schneider Electric Industries SAS nor any of its affiliates or subsidiaries shall be responsible or liable for misuse of the information contained herein.

Environment

Product certifications	CSA[RETURN]C-Tick[RETURN]UL
Ambient air temperature for operation	-25…70 °C
Ambient air temperature for storage	-40…85 °C
Vibration resistance	25 gn amplitude = +/- 2 mm (f = 10…55 Hz) conforming to IEC 60068-2-6
Shock resistance	50 gn for 11 ms conforming to IEC 60068-2-27

Packing Units

Unit Type of Package 1	PCE
Number of Units in Package 1	1

Contractual warranty

Warranty	18 months

XS7D1A1NBM12DIN

Dimensions

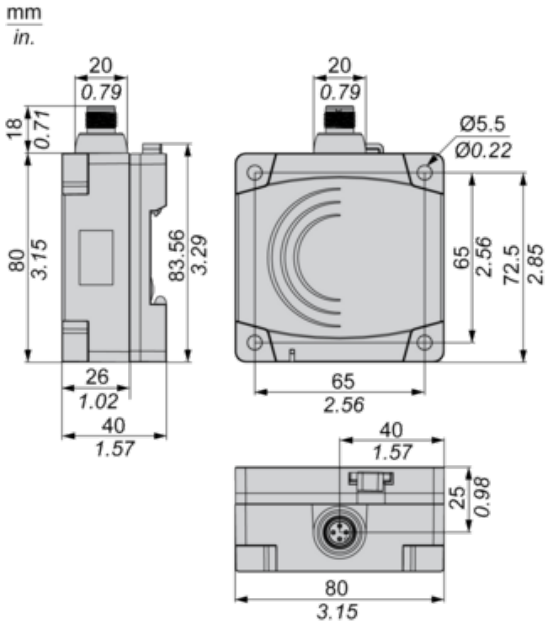

(1) Cable gland : M9.5 x 1

Setting-up

Minimum Mounting Distances (mm)

Side by Side

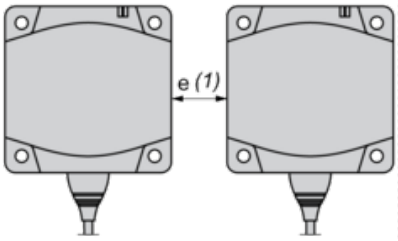

e (1) ≥ 120

Face to Face

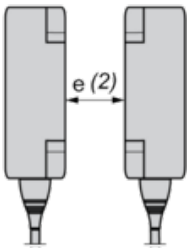

e (2) ≥ 300

Facing a Metal Object

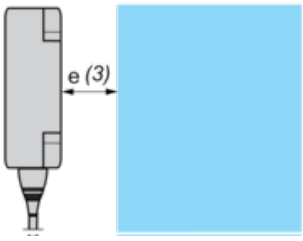

e (3) ≥ 120

Wiring Schemes

NPN

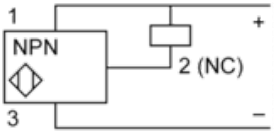
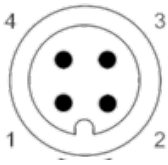
M12