Product data sheet
Characteristics

XS8C1A1PAL5
inductive sensor XS8 40x40x15 - PBT - Sn25mm - 12..24VDC - cable 5m

Green Premium™

Important message: We have updated the process for ordering Telemecanique Sensors products.For more information, please contact your Telemecanique Sensors representative in the UK&I at: UK.salesorders@tesensors.comYou can find all product information on the Telemecanique Sensors website: www.tesensors.com/uk/en
Local distributor code: 388783764
EAN Code: 3389110123111

Main

Range of product	Telemecanique Inductive proximity sensors XS
Series name	General purpose
Sensor type	Inductive proximity sensor
Device application	-
Sensor name	XS8
Sensor design	Flat form 40 x 40 x 15
Size	15 mm
Body type	Fixed
Detector flush mounting acceptance	Non flush mountable
Material	Plastic
Enclosure material	PBT
Type of output signal	Discrete
Wiring technique	3-wire
[Sn] nominal sensing distance	15 Mm flush mountable 25 mm non flush mountable
Discrete output function	1 NO
Output circuit type	DC
Discrete output type	PNP
Electrical connection	Cable
Cable length	5 m
[Us] rated supply voltage	12...24 V DC with reverse polarity protection
Switching capacity in mA	<= 200 mA DC with overload and short-circuit protection
IP degree of protection	IP68 double insulation conforming to IEC 60529

Complementary

Detection face	Frontal
Front material	PBT
Fine adjustment zone	8…15 Mm flush mountable 8…25 mm non flush mountable
Differential travel	1...15% of Sr
Cable composition	3 x 0.34 mm²
Wire insulation material	PVC
Supply voltage limits	10…36 V DC
Maximum residual current	1.5 mA open state
Switching frequency	<= 1000 Hz
Maximum voltage drop	<2 V (closed)
Current consumption	<= 10 mA no-load

The information provided in this documentation contains general descriptions and/or technical characteristics of the performance of the products contained herein.
This documentation is not intended as a substitute for and is not to be used for determining suitability or reliability of these products for specific user applications.
It is the duty of any such user or integrator to perform the appropriate and complete risk analysis, evaluation and testing of the products with respect to the relevant specific application or use thereof.
Neither Schneider Electric Industries SAS nor any of its affiliates or subsidiaries shall be responsible or liable for misuse of the information contained herein.

Maximum delay first up	10 ms
Maximum delay response	0.3 ms
Maximum delay recovery	0.8 ms
Marking	CE
Depth	15 mm
Height	40 mm
Width	40 mm
Net weight	0.215 kg

Environment

Product certifications	UL[RETURN]CSA
Ambient air temperature for operation	-25…70 °C
Ambient air temperature for storage	-40…85 °C
Vibration resistance	25 gn amplitude = +/- 2 mm (f = 10…55 Hz) conforming to IEC 60068-2-6
Shock resistance	50 gn for 11 ms conforming to IEC 60068-2-27

Packing Units

Unit Type of Package 1	PCE
Number of Units in Package 1	1
Package 1 Height	4.200 cm
Package 1 Width	9.200 cm
Package 1 Length	13.200 cm
Package 1 Weight	214.000 g
Unit Type of Package 2	S01
Number of Units in Package 2	11
Package 2 Height	15.000 cm
Package 2 Width	15.000 cm
Package 2 Length	40.000 cm
Package 2 Weight	2.467 kg

Offer Sustainability

Sustainable offer status	Green Premium product
REACh Regulation	REACh Declaration
EU RoHS Directive	Pro-active compliance (Product out of EU RoHS legal scope)
Mercury free	Yes
RoHS exemption information	Yes
Circularity Profile	No need of specific recycling operations

Contractual warranty

Warranty	18 months

XS8C1A1PAL5

Dimensions

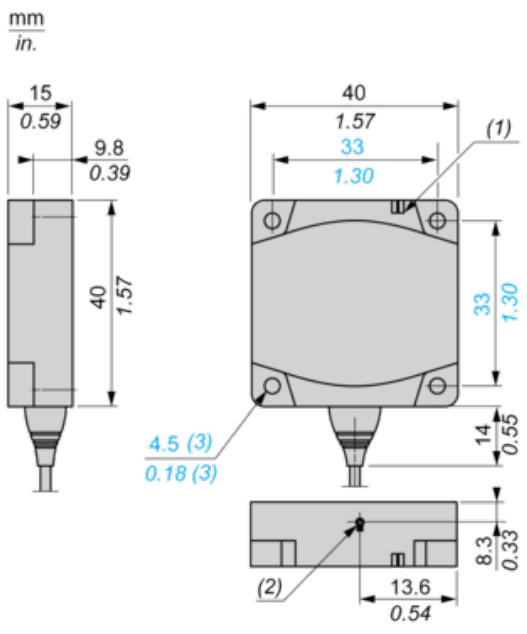

(1) LED
(2) Teach mode button
(3) For CHC type screws

Setting-up

Minimum Mounting Distances (mm)

Side by Side

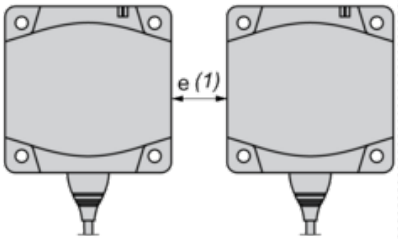

Face to Face

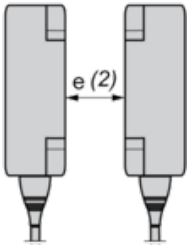

Facing a Metal Object

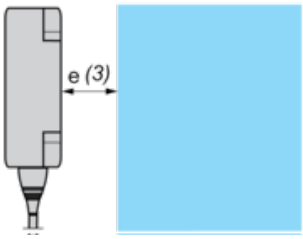

	e (1)	e (2)	e (3)
Flush mounted	60	120	15
Not flush mounted	125	250	

Wiring Schemes

PNP

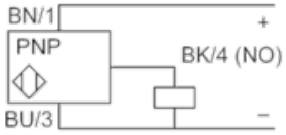

BU : Blue

BN : Brown

BK : Black