Product data sheet
Characteristics

ATS22C59Q
soft starter-ATS22-control 220V-power 230V(160kW)/400V(315kW)/440V(355kW)

Main

Range of product	Altistart 22
Product or component type	Soft starter
Product destination	Asynchronous motors
Product specific application	Pumps and fans
Component name	ATS22
Network number of phases	3 phases
[Us] rated supply voltage	230...440 V - 15...10 %
Motor power kW	160 KW 230 V 315 KW 400 V 355 kW 440 V
Factory setting current	560 A
Power dissipation in W	251 W for standard applications
Utilisation category	AC-53A
Type of start	Start with torque control (current limited to 3.5 In)
IcL starter rating	590 A for connection in the motor supply line for standard applications
IP degree of protection	IP00

Complementary

Assembly style	With heat sink
Function available	Internal bypass
Supply voltage limits	195…484 V
Supply frequency	50...60 Hz - 10...10 %
Network frequency	45...66 Hz
Device connection	To the motor delta terminals In the motor supply line
[Uc] control circuit voltage	230 V - 15...10 % 50/60 Hz
Control circuit consumption	20 W
Discrete output number	2
Discrete output type	Relay outputs R1 230 V running, alarm, trip, stopped, not stopped, starting, ready C/O Relay outputs R2 230 V running, alarm, trip, stopped, not stopped, starting, ready C/O
Minimum switching current	100 mA at 12 V DC (relay outputs)
Maximum switching current	5 A 250 V AC resistive 1 relay outputs 5 A 30 V DC resistive 1 relay outputs 2 A 250 V AC inductive 0.4 20 ms relay outputs 2 A 30 V DC inductive 7 ms relay outputs
Discrete input number	3
Discrete input type	(LI1, LI2, LI3) logic, 5 mA 4.3 kOhm
Discrete input voltage	24 V <= 30 V
Discrete input logic	Positive logic LI1, LI2, LI3 at State 0: < 5 V and <= 2 mA at State 1: > 11 V, >= 5 mA
Output current	0.4...1 Icl adjustable
PTC probe input	750 Ohm

The information provided in this documentation contains general descriptions and/or technical characteristics of the performance of the products contained herein.
This documentation is not intended as a substitute for and is not to be used for determining suitability or reliability of these products for specific user applications.
It is the duty of any such user or integrator to perform the appropriate and complete risk analysis, evaluation and testing of the products with respect to the relevant specific application or use thereof.
Neither Schneider Electric Industries SAS nor any of its affiliates or subsidiaries shall be responsible or liable for misuse of the information contained herein.

Communication port protocol	Modbus
Connector type	1 RJ45
Communication data link	Serial
Physical interface	RS485 multidrop
Transmission rate	4800, 9600 or 19200 bps
Installed device	31
Protection type	Phase failure: line Thermal protection: motor Thermal protection: starter
Marking	CE
Type of cooling	Forced convection
Operating position	Vertical +/- 10 degree
Height	455 mm
Width	304 mm
Depth	339.7 mm
Net weight	50 kg
Motor power range AC-3	110…220 KW at 200…240 V 3 phases 250…500 kW at 380…440 V 3 phases
Motor starter type	Soft starter

Environment

Electromagnetic compatibility	Conducted and radiated emissions level A conforming to IEC 60947-4-2 Damped oscillating waves level 3 conforming to IEC 61000-4-12 Electrostatic discharge level 3 conforming to IEC 61000-4-2 Immunity to electrical transients level 4 conforming to IEC 61000-4-4 Immunity to radiated radio-electrical interference level 3 conforming to IEC 61000-4-3 Voltage/current impulse level 3 conforming to IEC 61000-4-5
Standards	EN/IEC 60947-4-2
Product certifications	UL[RETURN]CCC[RETURN]C-Tick[RETURN]CSA[RETURN]GOST
Vibration resistance	1 gn (f= 13…200 Hz) conforming to EN/IEC 60068-2-6 1.5 mm (f= 2…13 Hz) conforming to EN/IEC 60068-2-6
Shock resistance	15 gn for 11 ms conforming to EN/IEC 60068-2-27
Noise level	56 dB
Pollution degree	Level 2 conforming to IEC 60664-1
Relative humidity	0…95 % without condensation or dripping water conforming to EN/IEC 60068-2-3
Ambient air temperature for operation	-10…40 °C (without derating) 40…60 °C (with current derating 2.2 % per °C)
Ambient air temperature for storage	-25…70 °C
Operating altitude	<= 1000 m without derating > 1000...< 2000 m with current derating of 2.2 % per additional 100 m

Packing Units

Unit Type of Package 1	PCE
Number of Units in Package 1	1
Package 1 Height	54.864 cm
Package 1 Width	57.15 cm
Package 1 Length	40.64 cm
Package 1 Weight	37 kg

Offer Sustainability

REACh Regulation	REACh Declaration
EU RoHS Directive	Pro-active compliance (Product out of EU RoHS legal scope)
Mercury free	Yes
China RoHS Regulation	China RoHS Declaration
RoHS exemption information	Yes
WEEE	The product must be disposed on European Union markets following specific waste collection and never end up in rubbish bins

Contractual warranty

Warranty	18 months

ATS22C59Q

Frame Size E

Dimensions

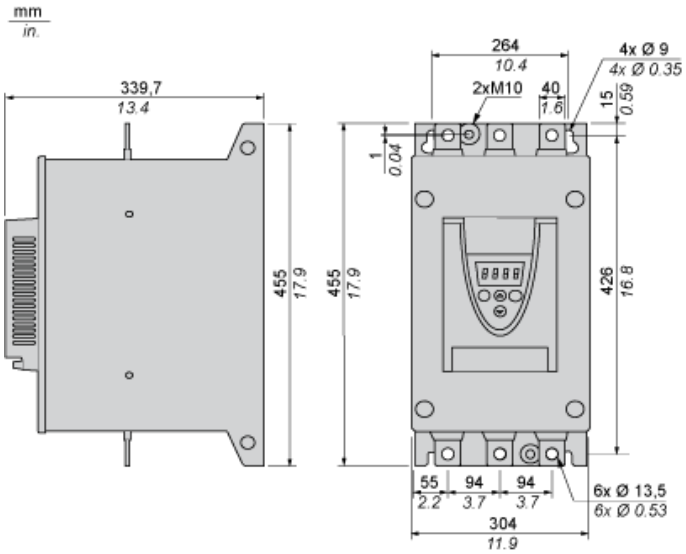

Precautions

Standards

The Altistart 22 soft starter is compliant with pollution Degree 2 as defined in NEMA ICS1-1 or IEC 60664-1.

For environment pollution degree 3, install the Altistart 22 soft starter inside a cabinet type 12 or IP54.

⚠ DANGER

HAZARD OF ELECTRIC SHOCK, EXPLOSION, OR ARC FLASH

ATS22 soft starters are open devices and must be mounted in a suitable enclosure.

Failure to follow these instructions will result in death or serious injury.

Air Circulation

Leave sufficient free space to help the air required for cooling purposes to circulate from the bottom to the top of the unit.

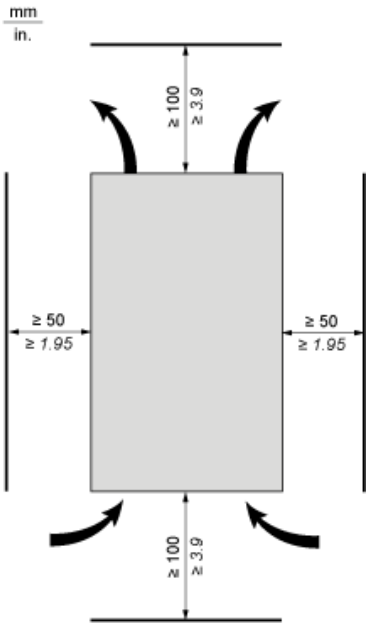

Overheating

To avoid the soft starter to overheat, respect the following recommendations:

- Mount the Altistart 22 Soft Starter within ± 10° of vertical.
- Do not locate the Altistart 22 Soft Starter near heat radiating elements.
- Electrical current through the Altistart 22 Soft Starter will result in heat losses that must be dissipated into the ambient air immediately surrounding the soft starter. To help prevent a thermal fault, provide sufficient enclosure cooling and/or ventilation to limit the ambient temperature around the soft starter.
- If several soft starters are installed in a control panel, arrange them in a row. Do not stack soft starters. Heat generated from the bottom soft starter can adversely affect the ambient temperature around the top soft starter.

Wall mounted or Floor-standing Enclosure with IP 23 Degree of protection

Introduction

To help proper air circulation in the soft starter, grilles and forced ventilation can be installed.

Ventilation Grilles

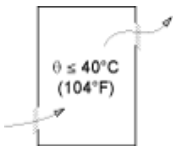

Forced Ventilation Unit

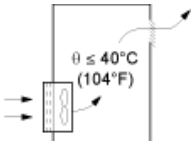

Power Terminal

Bar Style

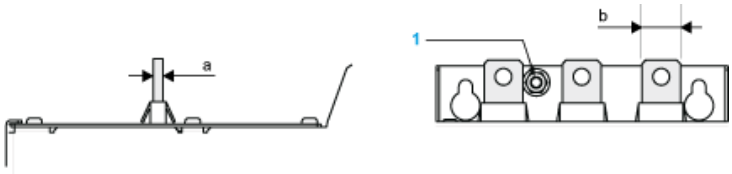

Power supply and output to motor	Bar	b	40 mm (1.18 in)
a	5 mm (0.2 in)		
Bolt	M12 (0.47 in)		
Cable and protective cover	Size	2X240 mm²	
Gauge	2X500 MCM		
Protective cover	LA9F703		
Tightening torque	57 N.m		
498.75 lb.in			

Power connections, minimum required wiring section

IEC cable mm² (Cu 70°C/158°F) (1)	UL cable AWG (Cu 75°C/167°F) (1)
2 X 185	2 X 500 MCM

230 Vac control, logic Inputs (LI) 24 Vdc, 3-wire control

With Line Contactor, Freewheel or Controlled Stop

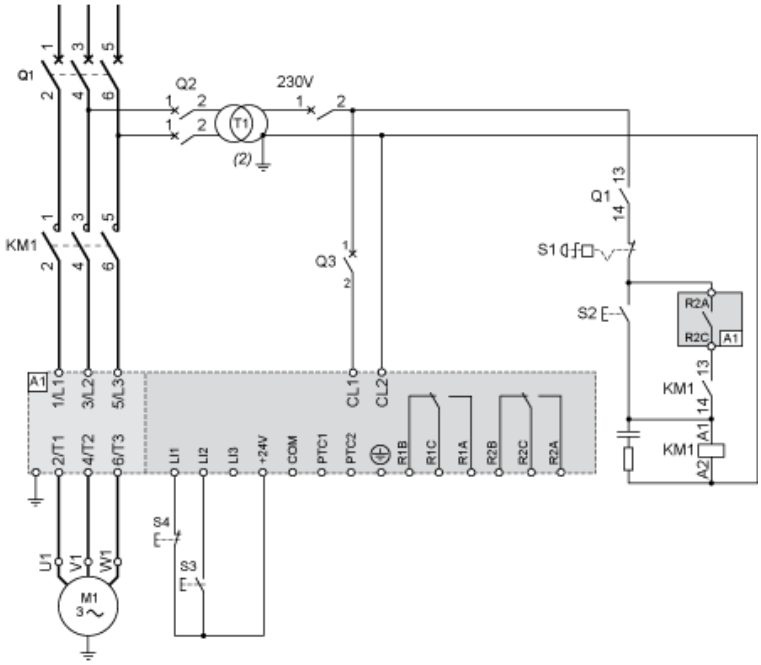

230 Vac control, logic Inputs (LI) 24 Vdc, 2-wire control,freewheel stop

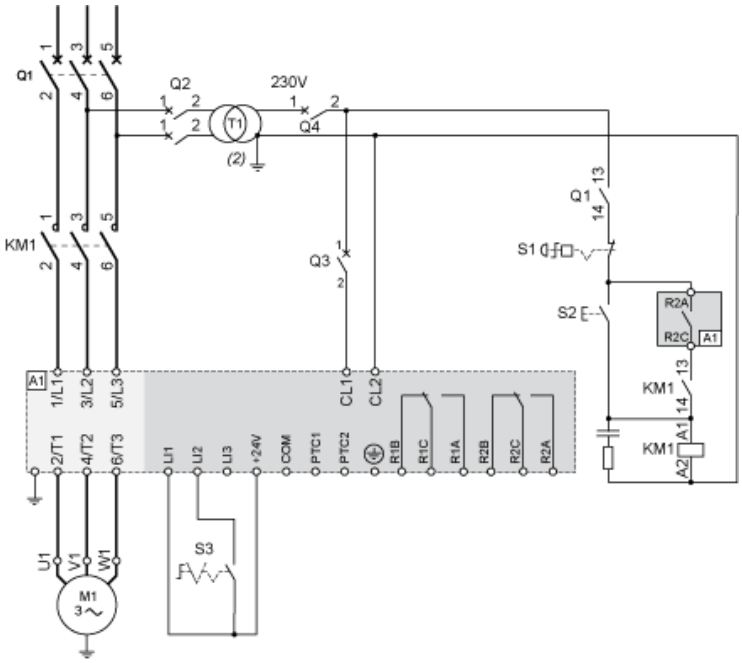

Connection in the motor delta winding in series with each winding

Wiring

ATS22 soft starters connected to motors with the delta connections can be inserted in series in the motor windings.

The following wiring requieres particular attention. It is documented in the Altistart 22 Soft start - soft stop unit user manual. Please contact Schneider Electric commercial organisation for further informations.

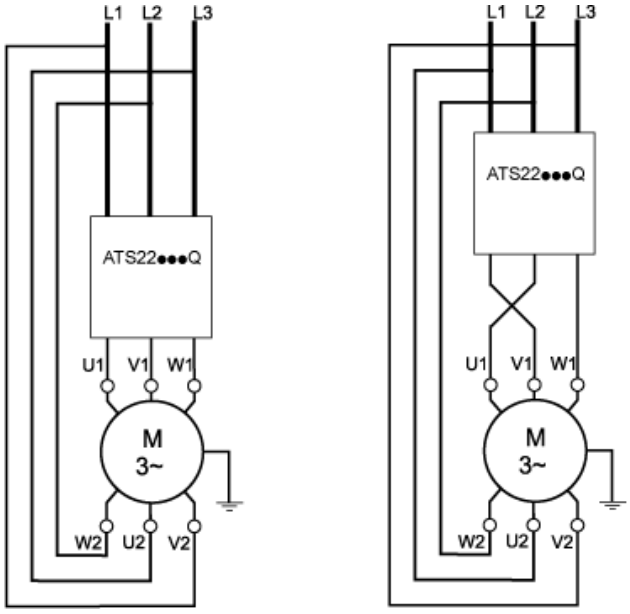

Example

A 400 V - 110 kW motor with a line current of 195 A (nominal current for the delta connection). The current in each winding is equal to 195/1.5 or 130 A. The rating is determined by selecting the soft starter with a permanent nominal current (ICL) just above this current.

Motor Thermal Protection - Cold Curves

Curves

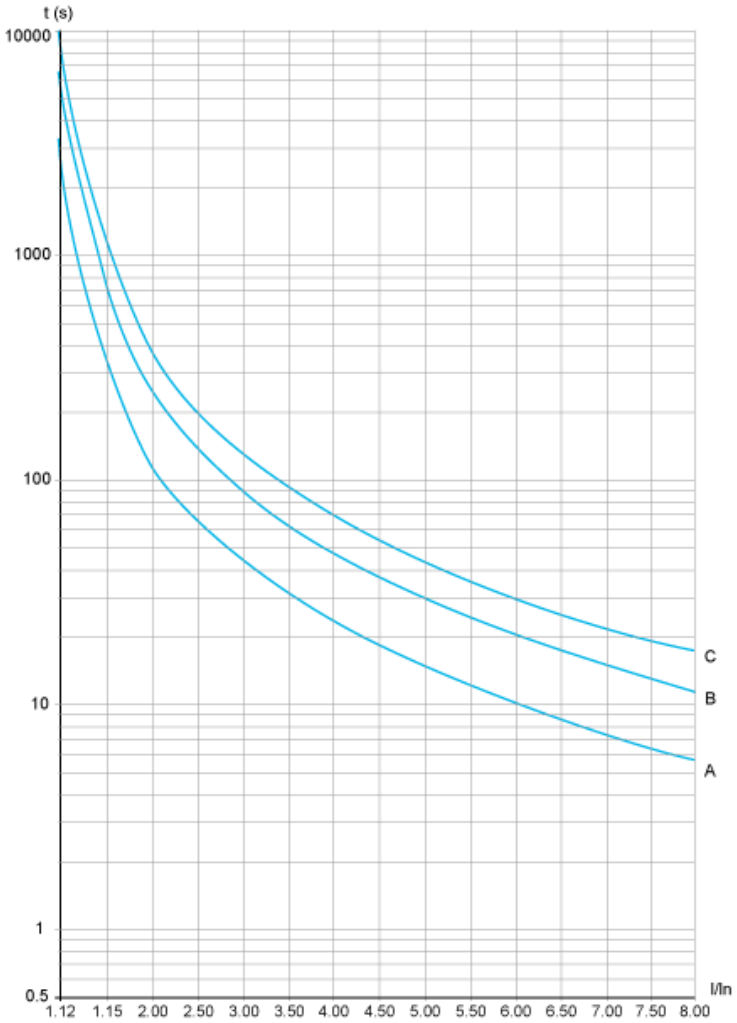

A Class 10
B Class 20
C Class 30

Trip time for a Standard Application (Class 10)

3.5 In
32 s

Trip time for a Severe Application (Class 20)

3.5 In
63 s

Trip time for a Severe Application (Class 30)

3.5 In
95 s

Curves

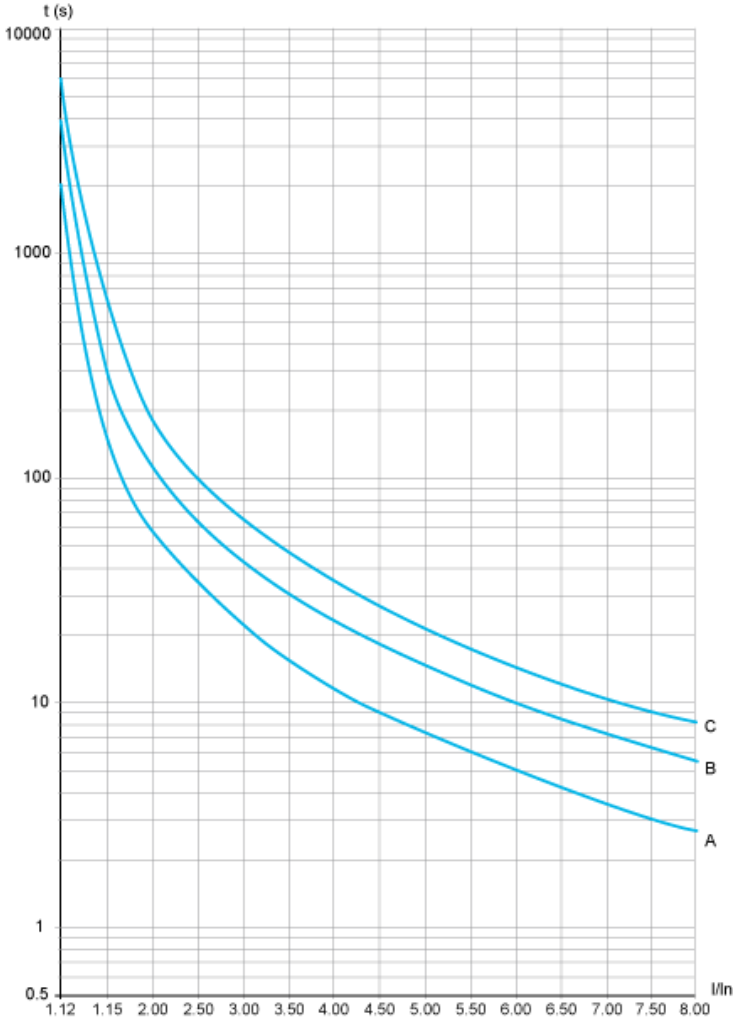

A Class 10
B Class 20
C Class 30

Trip time for a Standard Application (Class 10)

3.5 In
16 s

Trip time for a Severe Application (Class 20)

3.5 In
32 s

Trip time for a Severe Application (Class 30)

3.5 In
48 s