Product data sheet
Characteristics

XS7D1A1NAL2
inductive sensor XS7 80x80x26 - PBT - Sn40mm - 12..24VDC - cable 2m

Main

Range of product	Telemecanique Inductive proximity sensors XS
Series name	General purpose
Sensor type	Inductive proximity sensor
Device application	-
Sensor name	XS7
Sensor design	Flat form 80 x 80 x 26
Size	26 mm
Body type	Fixed
Detector flush mounting acceptance	Flush mountable
Material	Plastic
Enclosure material	PBT
Type of output signal	Discrete
Wiring technique	3-wire
Discrete output function	1 NO
Output circuit type	DC
Discrete output type	NPN
Electrical connection	Cable
Cable length	2 m
[Us] rated supply voltage	12...24 V DC with reverse polarity protection
Switching capacity in mA	<= 100 mA DC with overload and short-circuit protection
IP degree of protection	IP68 double insulation conforming to IEC 60529

Complementary

Detection face	Frontal
Front material	PBT
Operating zone	0…32 mm
Differential travel	1...15% of Sr
Cable composition	3 x 0.34 mm²
Wire insulation material	PVC
Status LED	Output state: 1 LED (yellow)
Supply voltage limits	10…36 V DC
Switching frequency	<= 100 Hz
Maximum voltage drop	<2 V (closed)
Current consumption	<= 10 mA no-load
Maximum delay first up	30 ms
Maximum delay response	5 ms
Maximum delay recovery	35 ms
Marking	CE
Depth	26 mm
Height	80 mm

The information provided in this documentation contains general descriptions and/or technical characteristics of the performance of the products contained herein.
This documentation is not intended as a substitute for and is not to be used for determining suitability or reliability of these products for specific user applications.
It is the duty of any such user or integrator to perform the appropriate and complete risk analysis, evaluation and testing of the products with respect to the relevant specific application or use thereof.
Neither Schneider Electric Industries SAS nor any of its affiliates or subsidiaries shall be responsible or liable for misuse of the information contained herein.

Width	80 mm
Net weight	0.34 kg

Environment

Product certifications	CSA[RETURN]C-Tick[RETURN]Ecolab[RETURN]UL
Ambient air temperature for operation	-25…70 °C
Ambient air temperature for storage	-40…85 °C
Vibration resistance	25 gn amplitude = +/- 2 mm (f = 10…55 Hz) conforming to IEC 60068-2-6
Shock resistance	50 gn for 11 ms conforming to IEC 60068-2-27

Packing Units

Unit Type of Package 1	PCE
Number of Units in Package 1	1
Package 1 Height	6.8 cm
Package 1 Width	9.5 cm
Package 1 Length	13.2 cm
Package 1 Weight	371.0 g
Unit Type of Package 2	S02
Number of Units in Package 2	10
Package 2 Height	15 cm
Package 2 Width	30 cm
Package 2 Length	40 cm
Package 2 Weight	4.158 kg
Unit Type of Package 3	P06
Number of Units in Package 3	160
Package 3 Height	75 cm
Package 3 Width	40 cm
Package 3 Length	80 cm
Package 3 Weight	84.36 kg

Offer Sustainability

Sustainable offer status	Green Premium product
REACh Regulation	REACh Declaration
EU RoHS Directive	Pro-active compliance (Product out of EU RoHS legal scope)
Mercury free	Yes
RoHS exemption information	Yes
Circularity Profile	No need of specific recycling operations

Contractual warranty

Warranty	18 months

XS7D1A1NAL2

Dimensions

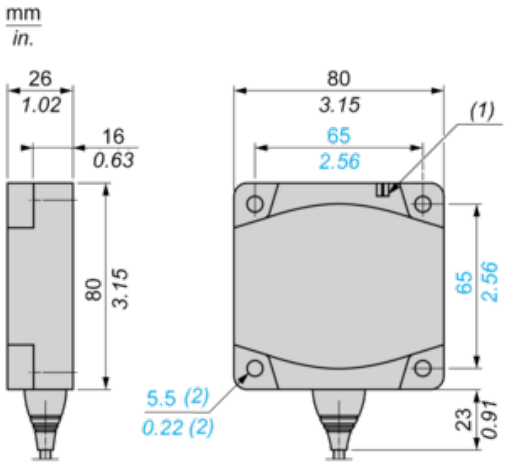

(1) LED

(2) For CHC type screws

Setting-up

Minimum Mounting Distances (mm)

Side by Side

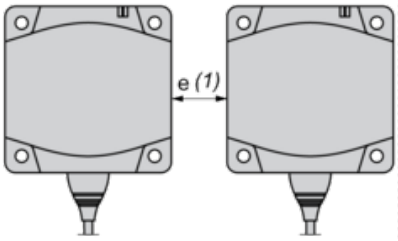

e (1) ≥ 120

Face to Face

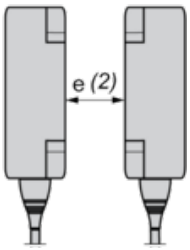

e (2) ≥ 300

Facing a Metal Object

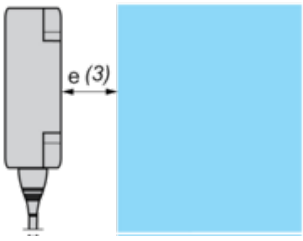

e (3) ≥ 120

Wiring Schemes

NPN

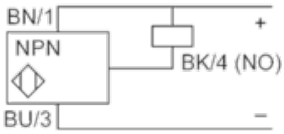

BU : Blue

BN : Brown

BK : Black